SOLATUBE 290 DS
(14 IN / 350 MM)
PITCHED SELF-FLASHING
HARD CEILING

REVISIONS					
REV	ECO	DATE	REVISED	CHECKED	APPROVED
A		10/4/2010			

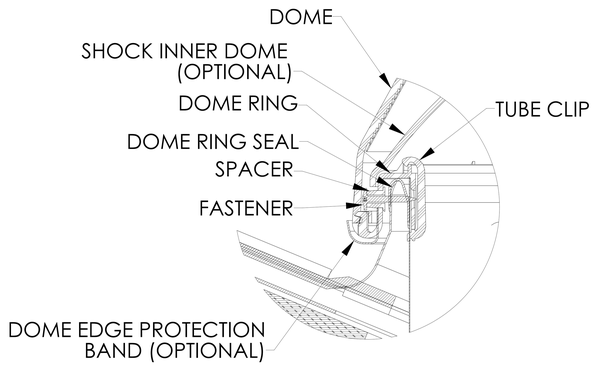

DETAIL A
SCALE 3 : 1

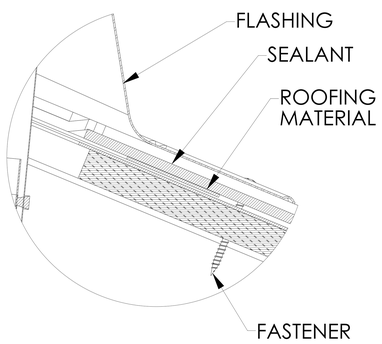

DETAIL B
SCALE 3 : 1

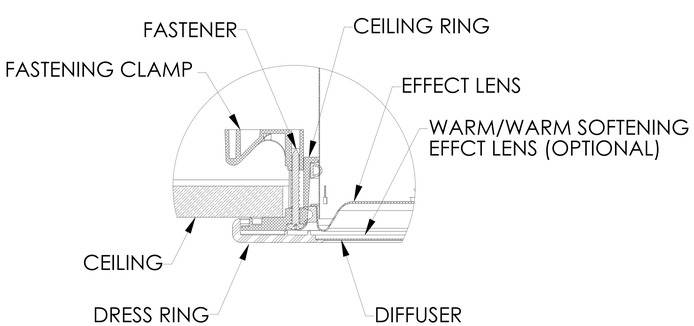

DETAIL C
SCALE 3 : 1

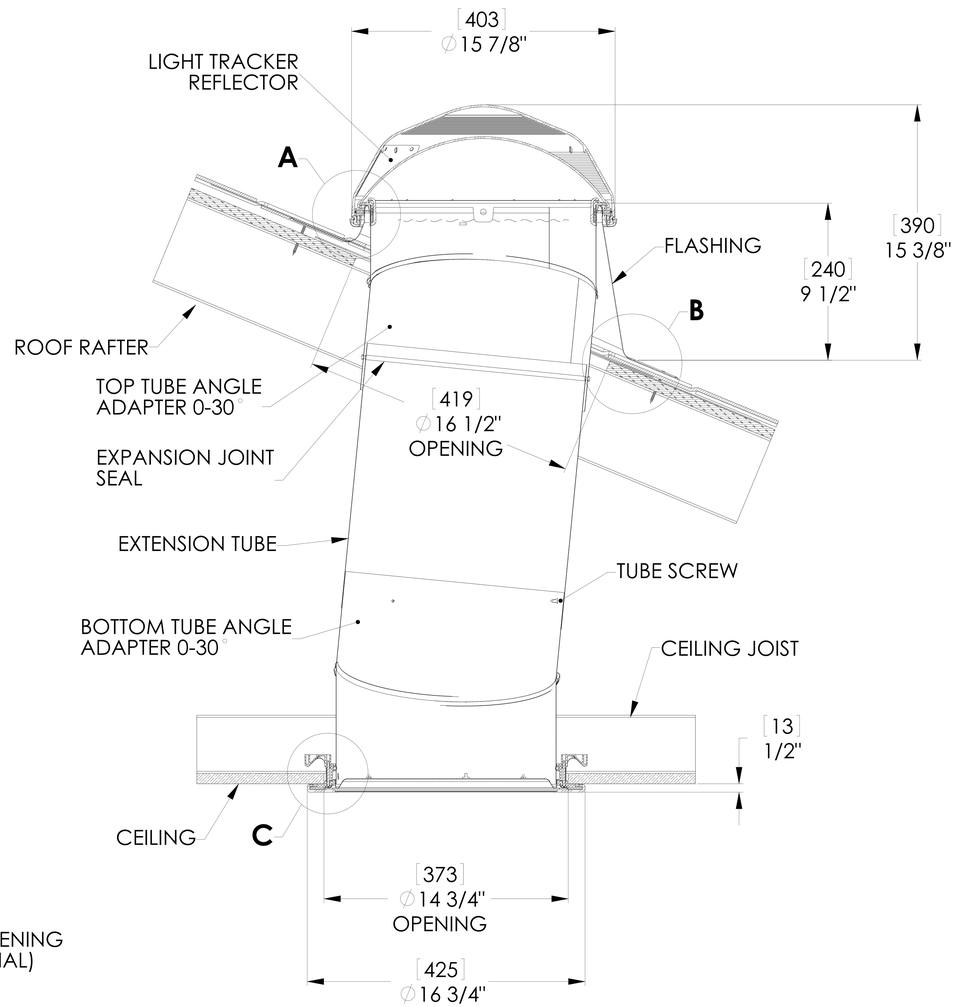

FULL SECTION
SCALE 1:1

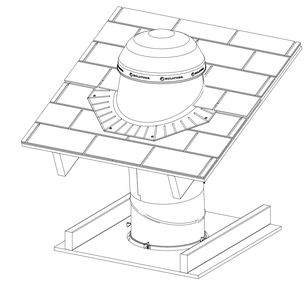

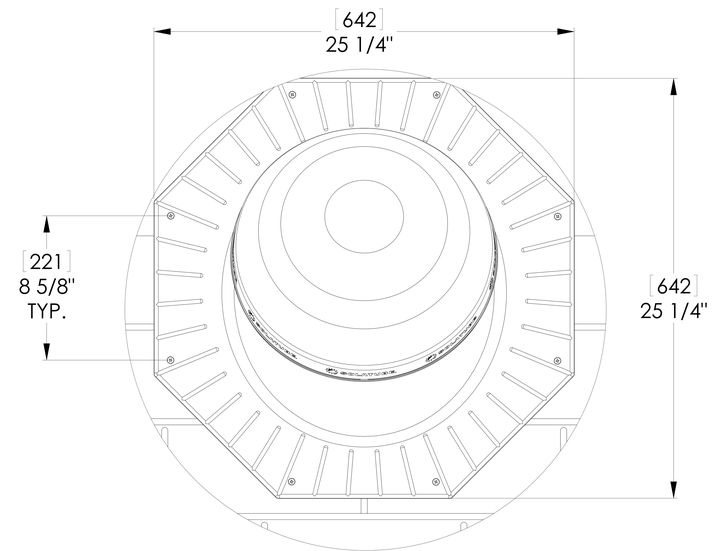

TOP VIEW

NOTES:

1. STRUCTURAL ELEMENTS (PLYWOOD, RAFTERS, DRYWALL ETC. BY OTHERS & SHOWN FOR REFERENCE ONLY.
2. ALL TUBE JOINTS & SEAMS TAPED WITH 2" FOIL TAPE (NOT SHOWN).
3. DIMENSIONS IN BRACKETS ARE METRIC UNLESS OTHERWISE SPECIFIED.
4. 6" MIN CLEARANCE SHOULD BE MAINTAINED FROM ALL SOLATUBE COMPONENTS AND OTHER PLENUM COMPONENTS.

UNLESS OTHERWISE SPECIFIED:
DIMENSION TOLERANCE
FRACTION : ±1/4"
INCH .X ± .1 MILLIMETER [.X] ± 2.5

SOLATUBE INTERNATIONAL, INC.
COPYRIGHT 2010
WWW.SOLATUBE.COM

SOLATUBE
2210 OAK RIDGE WAY
VISTA, CALIFORNIA 92081-8341
PH (760) 597-4400

MATERIAL -- --	DRAWN BY STEVENS	DATE 10/4/10
FINISH --	CHECKED BY --	DATE --
DO NOT SCALE DRAWING	APPROVED BY --	DATE --

TITLE: **SOLATUBE 290 DS PITCHED SELF-FLASHING HARD CEILING**

SIZE | DWG. NO. **WEB-290DS-SFP-HC** | REV **A**

SCALE: 1:1 | SHEET 1 OF 1