SOLATUBE 750 DS-O
(21 IN/530 MM)
CURB CAP OPEN CEILING - NO ANGLE ADAPTER
WITH OPTIONAL INNER DOME

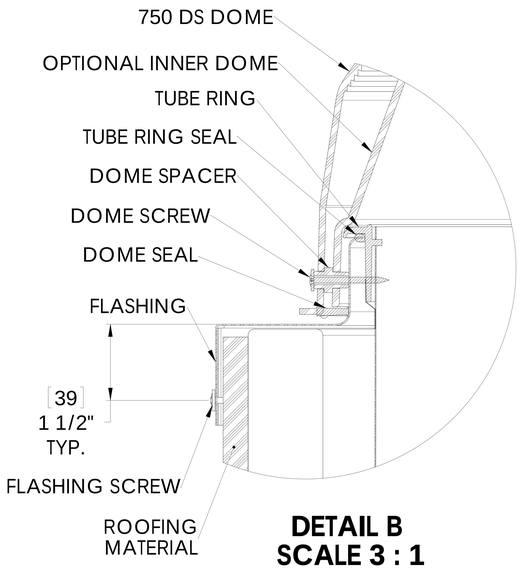

DETAIL B
SCALE 3 : 1

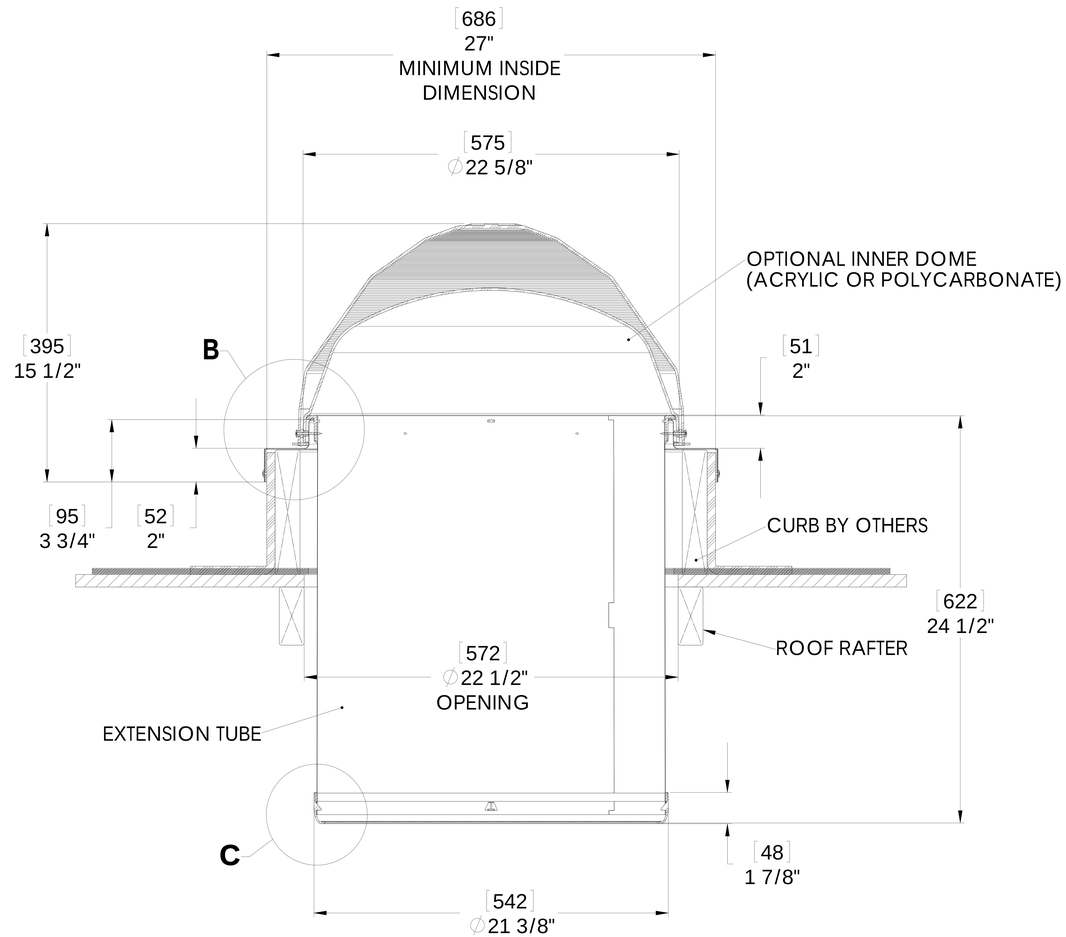

FULL SECTION
SCALE 1:1

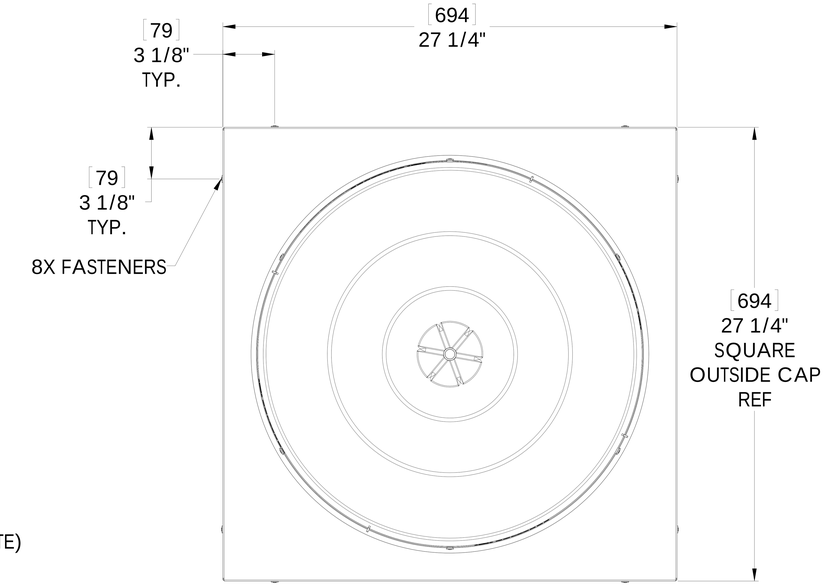

TOP VIEW
SCALE 1:1

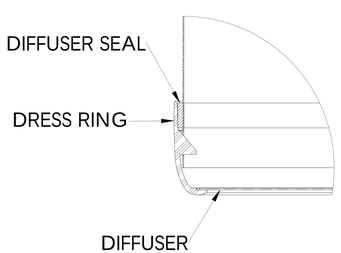

DETAIL C
SCALE 3 : 1

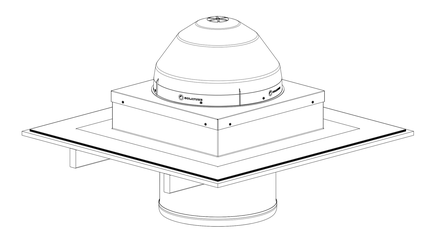

NOTES:

1. STRUCTURAL ELEMENTS (PLYWOOD, RAFTERS, DRYWALL ETC.) BY OTHERS & SHOWN FOR REFERENCE ONLY.
2. ALL TUBE JOINTS & SEAMS TAPED WITH 2" FOIL TAPE (NOT SHOWN).
3. DIMENSIONS IN BRACKETS ARE METRIC UNLESS OTHERWISE SPECIFIED.
4. 6" MIN CLEARANCE SHOULD BE MAINTAINED FROM ALL SOLATUBE COMPONENTS AND OTHER PLENUM COMPONENTS.

UNLESS OTHERWISE SPECIFIED: DIMENSIONS ARE IN INCHES TOLERANCES: ANGULAR: ±0.5° X ± .1 .XX ± .02 .XXX ± .005	SOLATUBE INTERNATIONAL, INC. COPYRIGHT 2009 WWW.SOLATUBE.COM	SOLATUBE 2210 OAK RIDGE WAY VISTA, CALIFORNIA 92081-8341 PH (760) 597-4400
MATERIAL -- --	DRAWN BY: STEVENS DATE: 3/2/09	TITLE: 750 DS (21") CURB CAP OPEN CEILING
FINISH --	CHECKED BY: -- DATE: --	SIZE: - / DWG. NO.: WEB-750-CF-OC-NA / REV: 1
DO NOT SCALE DRAWING	APPROVED BY: -- DATE: --	SCALE: 1:1 / SHEET 1 OF 1