REVISIONS					
REV	ECO	DATE	REVISED	CHECKED	APPROVED
A		10/4/2010			

SOLATUBE 160 DS
(10 IN / 250 MM)
SELF-FLASHING
HARD CEILING W/DAYLIGHT DIMMER

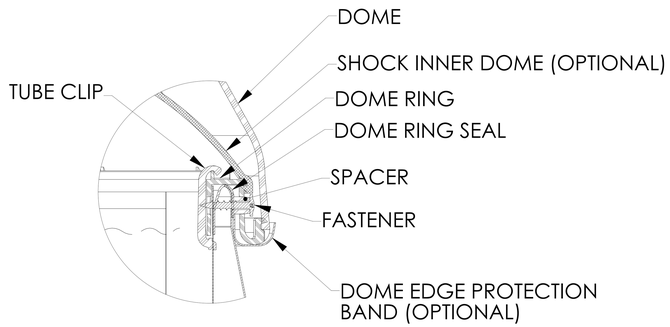

DETAIL A
SCALE 3 : 1

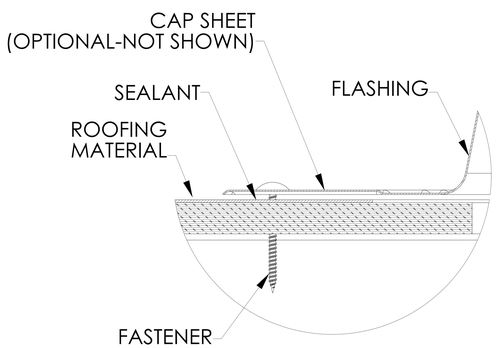

DETAIL B
SCALE 3 : 1

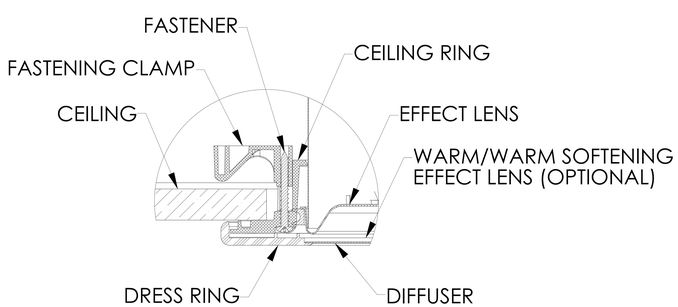

DETAIL C
SCALE 3 : 1

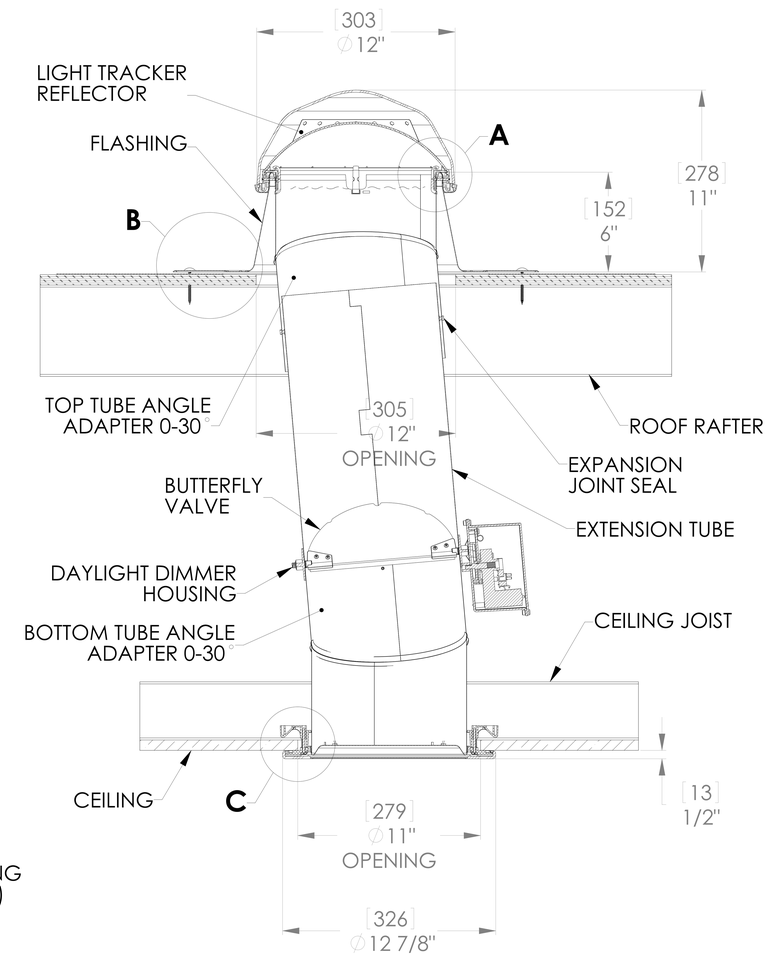

FULL SECTION
SCALE 1:1

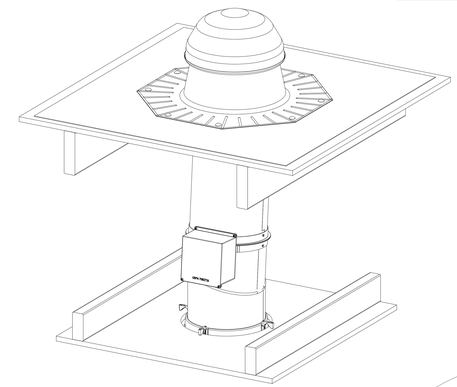

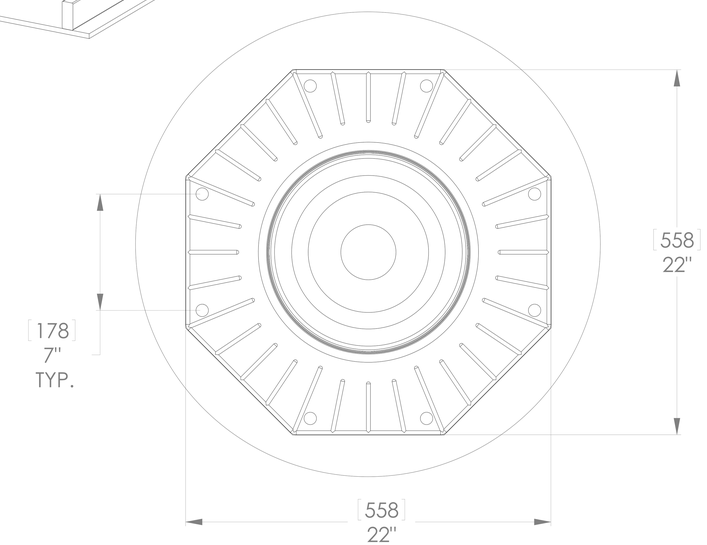

TOP VIEW

NOTES:

1. STRUCTURAL ELEMENTS (PLYWOOD, RAFTERS, DRYWALL ETC. BY OTHERS & SHOWN FOR REFERENCE ONLY.
2. ALL TUBE JOINTS & SEAMS TAPED WITH 2" FOIL TAPE (NOT SHOWN).
3. DIMENSIONS IN BRACKETS ARE METRIC UNLESS OTHERWISE SPECIFIED.
4. 6" MIN CLEARANCE SHOULD BE MAINTAINED FROM ALL SOLATUBE COMPONENTS AND OTHER PLENUM COMPONENTS.

UNLESS OTHERWISE SPECIFIED:
DIMENSION TOLERANCE
FRACTION : ±1/4"
INCH .X ± .1 | MILLIMETER [.X] ± 2.5

MATERIAL
--
--

FINISH
--

DO NOT SCALE DRAWING

SOLATUBE INTERNATIONAL, INC.
COPYRIGHT 2010

WWW.SOLATUBE.COM

DRAWN BY	DATE
STEVENS	9/28/10
CHECKED BY --	DATE --
APPROVED BY --	DATE --

SOLATUBE
2210 OAK RIDGE WAY
VISTA, CALIFORNIA 92081-8341
PH (760) 597-4400

TITLE:
SOLATUBE 160 DS SELF-FLASHING
HARD CEILING W/ DAYLIGHT DIMMER

SIZE | DWG. NO. **WEB-160DS-SF6-HC-DD** | REV **A**
SCALE: 1:1 | SHEET 1 OF 1