# SOLATUBE M74 DS-O
# (29 IN / 740 MM)
# CURB CAP
# OPEN CEILING

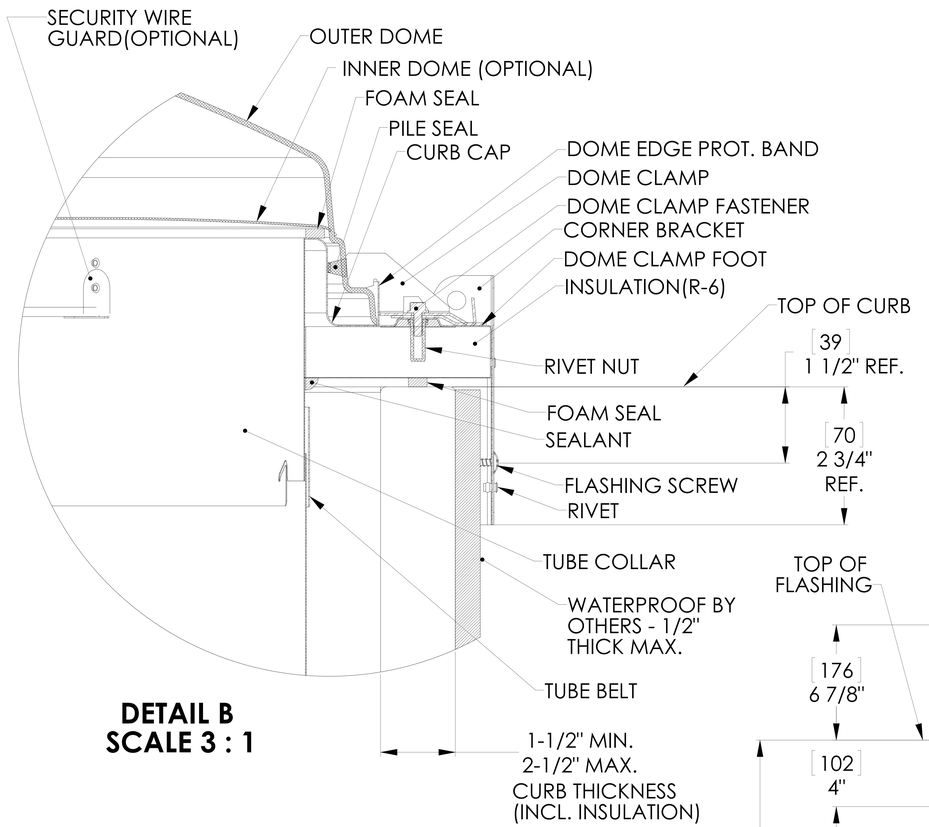


**DETAIL B**
**SCALE 3 : 1**

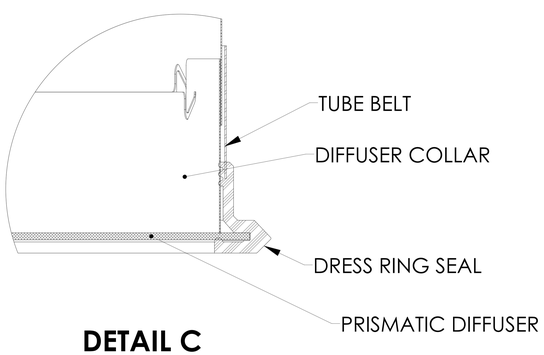


**DETAIL C**
**SCALE 4 : 1**

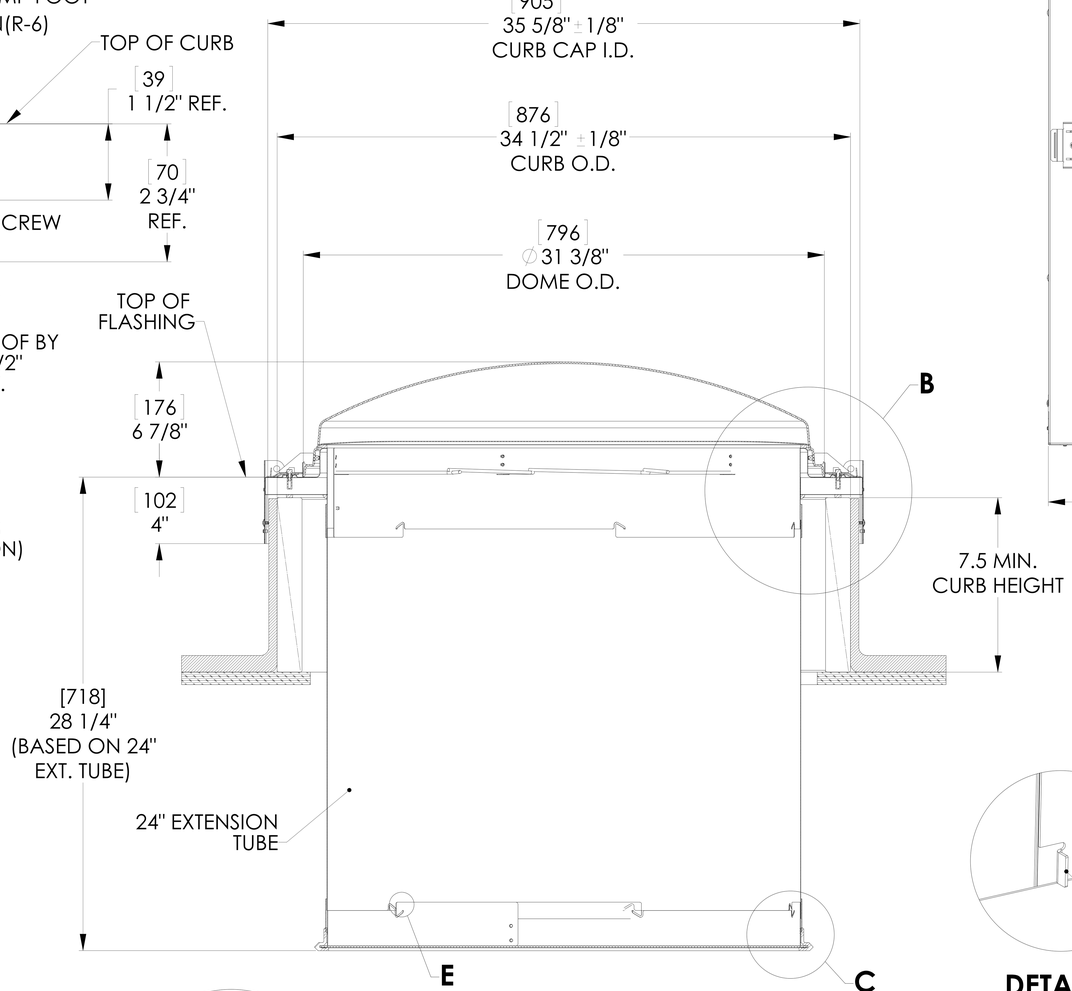


**SECTION A-A**

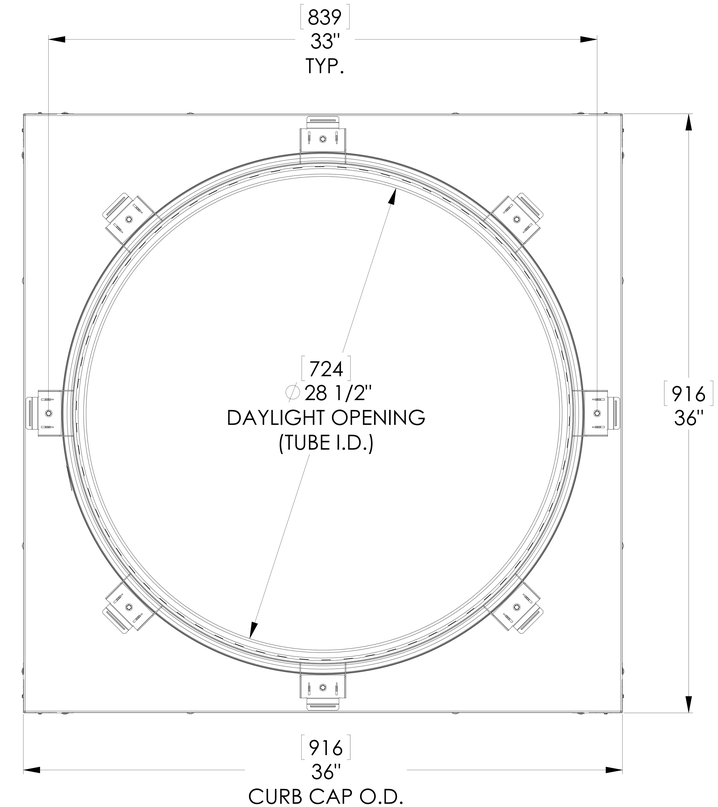


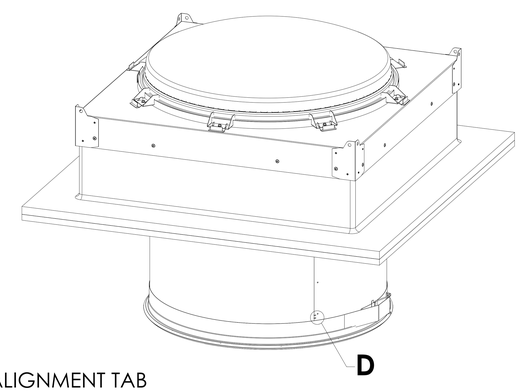


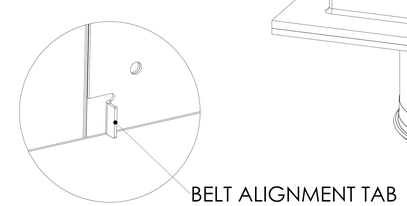


**DETAIL D**
**SCALE 8 : 1**

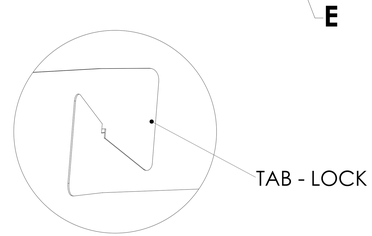


**DETAIL E**
**SCALE 8 : 1**

NOTES:

1. STRUCTURAL ELEMENTS (PLYWOOD, RAFTERS, DRYWALL ETC.) BY OTHERS & SHOWN FOR REFERENCE ONLY.
2. DIMENSIONS IN BRACKETS ARE METRIC UNLESS OTHERWISE SPECIFIED.
3. 6" MIN CLEARANCE SHOULD BE MAINTAINED FROM ALL SOLATUBE COMPONENTS AND OTHER PLENUM COMPONENTS.

| | | |
|---|---|---|
| UNLESS OTHERWISE SPECIFIED:<br>DIMENSION TOLERANCE<br>FRACTIONS : 1/4"<br>INCH .X : .1 .XX : .06<br>MILLIMETER [.X] : 2.5 [.XX] : 1.5 | SOLATUBE INTERNATIONAL, INC.<br>COPYRIGHT 2013<br>WWW.SOLATUBE.COM | SOLATUBE<br>2210 OAK RIDGE WAY<br>VISTA, CALIFORNIA 92081-8341<br>PH (760) 597-4400 |
| MATERIAL<br>--<br>-- | DRAWN BY: STEVENS<br>DATE: 20 MAY 13 | TITLE: M74 DS CURB MOUNT OPEN CEILING |
| FINISH<br>-- | CHECKED BY: --<br>DATE: -- | SIZE: D<br>DWG. NO.: SM74DS-O-DPP-FC-OC<br>REV: 3 |
| DO NOT SCALE DRAWING | APPROVED BY: --<br>DATE: -- | SCALE: 1:1<br>SHEET 1 OF 1 |