SOLATUBE M74 DS-O-C-DP-FC-A
(29 IN / 740 MM)
HD COLLECTOR W/ CURB CAP AMPLIFIER
OPEN CIELING

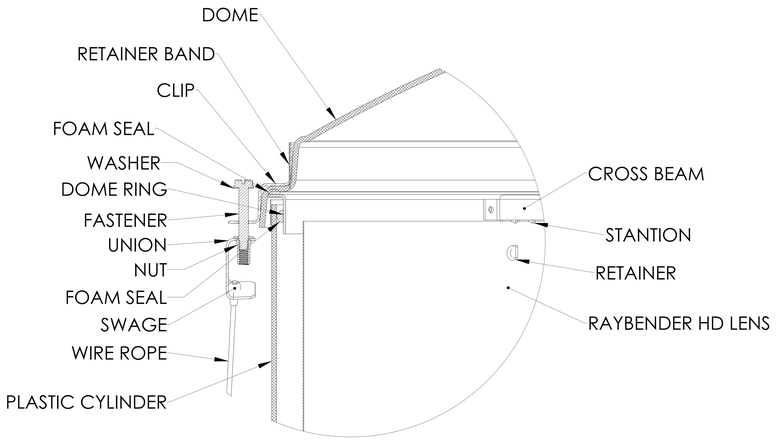

DETAIL C
SCALE 3 : 1

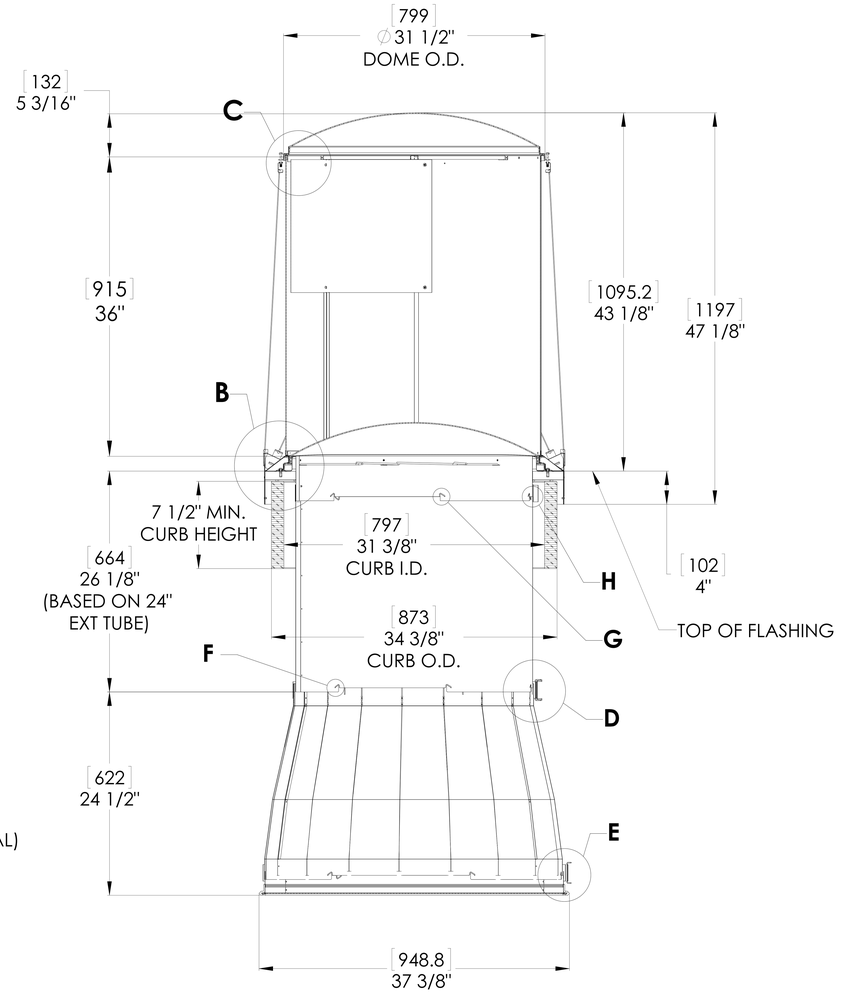

SECTION A-A
SCALE 1 : 2

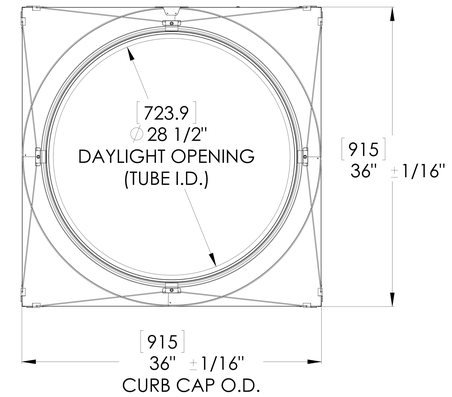

TOP VIEW

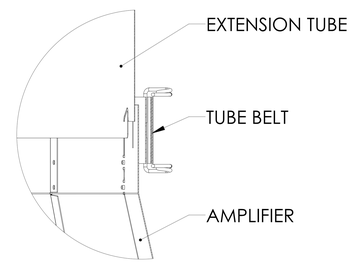

DETAIL D
SCALE 2 : 1

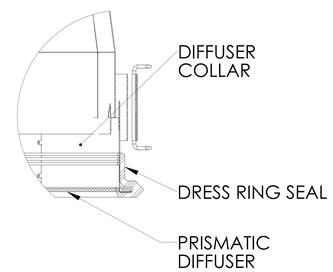

DETAIL E
SCALE 2 : 1

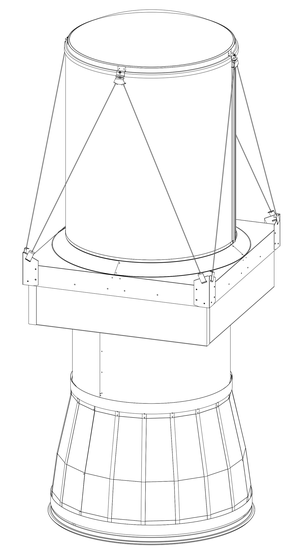

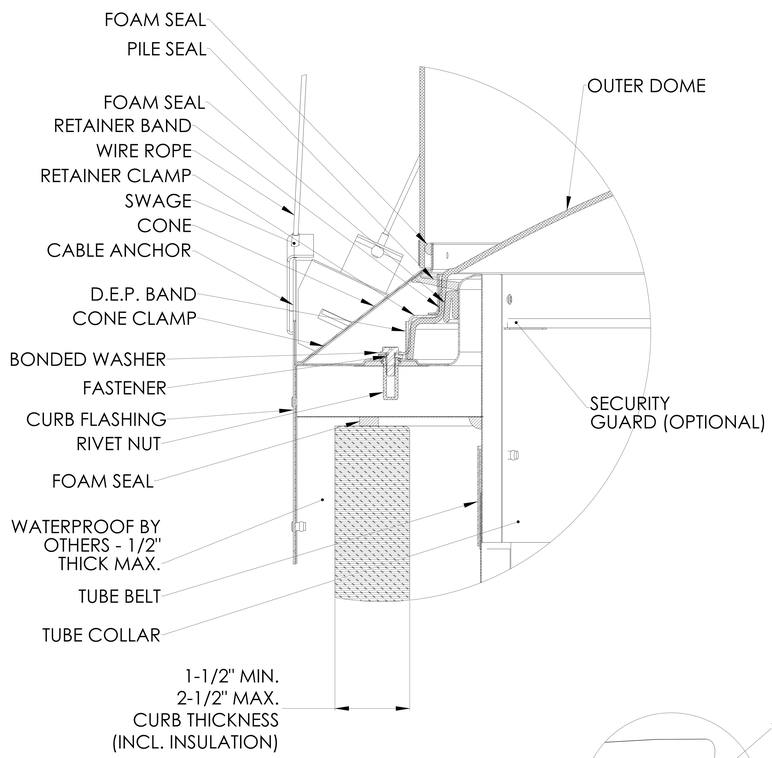

DETAIL B
SCALE 3 : 1

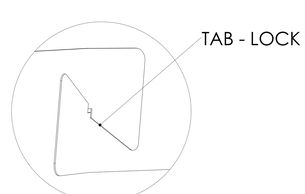

DETAIL G
SCALE 8 : 1

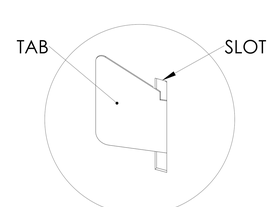

DETAIL F
SCALE 8 : 1

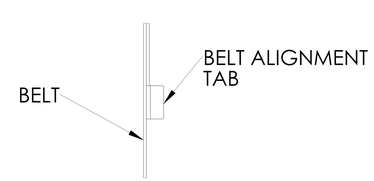

DETAIL H
SCALE 8 : 1

UNLESS OTHERWISE SPECIFIED: DIMENSION TOLERANCE FRACTIONS : 1/4" INCH .X : .1 .XX : .06 MILLIMETER [.X] : 2.5 [.XX] : 1.5	SOLATUBE INTERNATIONAL, INC. COPYRIGHT 2014 WWW.SOLATUBE.COM	SOLATUBE 2210 OAK RIDGE WAY VISTA, CALIFORNIA 92081-8341 PH (760) 597-4400	
MATERIAL	DRAWN BY STEVENS	DATE 24 APR 15	TITLE: M74 DS COLLECTOR RAYBENDER HD W/CURB FLASH & AMPLIFIER
FINISH	CHECKED BY	DATE	SIZE D / DWG. NO. SM74 DS-O-C-DP-FC-A / REV 1
DO NOT SCALE DRAWING	APPROVED BY	DATE	SCALE: 1:1 / SHEET 1 OF 1